DSC1200 SURFACE MOUNTED
SELF CONTAINED BARRIER SYSTEM
U. S. DEPT. OF STATE CRASH
CERTIFICATION K4, ZERO PENETRATION
DELTA RATED K8

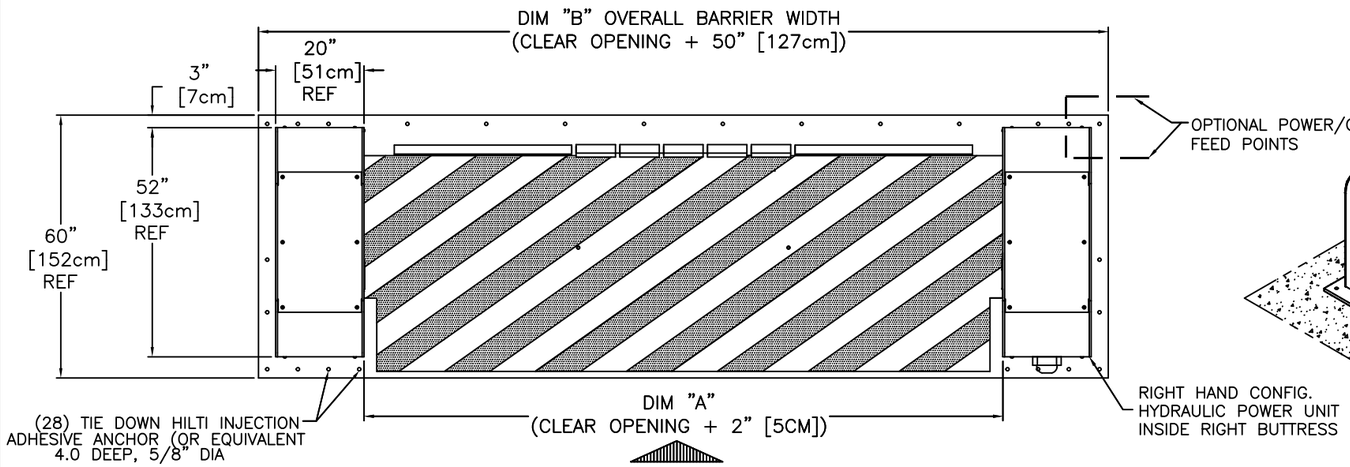

PLAN VIEW

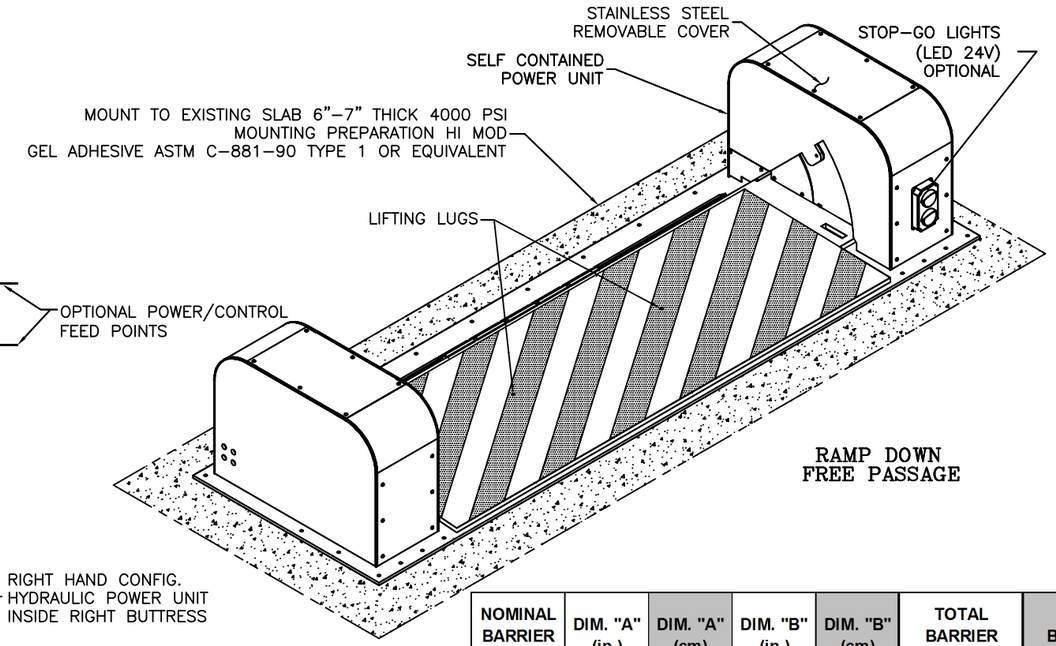

NOMINAL BARRIER WIDTH (ft.)	DIM. "A" (in.)	DIM. "A" (cm)	DIM. "B" (in.)	DIM. "B" (cm)	TOTAL BARRIER WEIGHT (lbs.)	TOTAL BARRIER WEIGHT (kg)
8 ft	98 in	249 cm	146 in	371 cm	8,020 lbs	3,638 kg
9 ft	110 in	279 cm	158 in	401 cm	8,357 lbs	3,790 kg
10 ft	122 in	310 cm	170 in	432 cm	8,694 lbs	3,943 kg
11 ft	134 in	340 cm	182 in	462 cm	9,031 lbs	4,096 kg
12 ft	146 in	371 cm	194 in	493 cm	9,368 lbs	4,249 kg
13 ft	158 in	401 cm	206 in	523 cm	9,705 lbs	4,402 kg
14 ft	170 in	432 cm	218 in	554 cm	10,042 lbs	4,555 kg
15 ft	182 in	462 cm	230 in	584 cm	10,379 lbs	4,708 kg
16 ft	194 in	493 cm	242 in	615 cm	10,717 lbs	4,861 kg
17 ft	206 in	523 cm	254 in	645 cm	11,054 lbs	5,014 kg
18 ft	218 in	554 cm	266 in	676 cm	11,391 lbs	5,167 kg
19 ft	230 in	584 cm	278 in	706 cm	11,728 lbs	5,320 kg
20 ft	242 in	615 cm	290 in	737 cm	12,065 lbs	5,472 kg

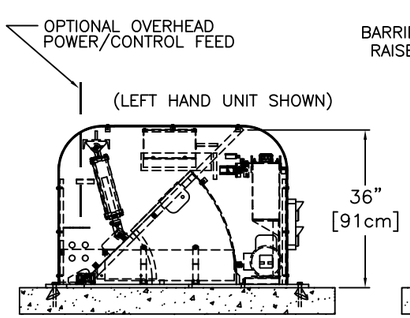

LEFT–SIDE ELEVATION

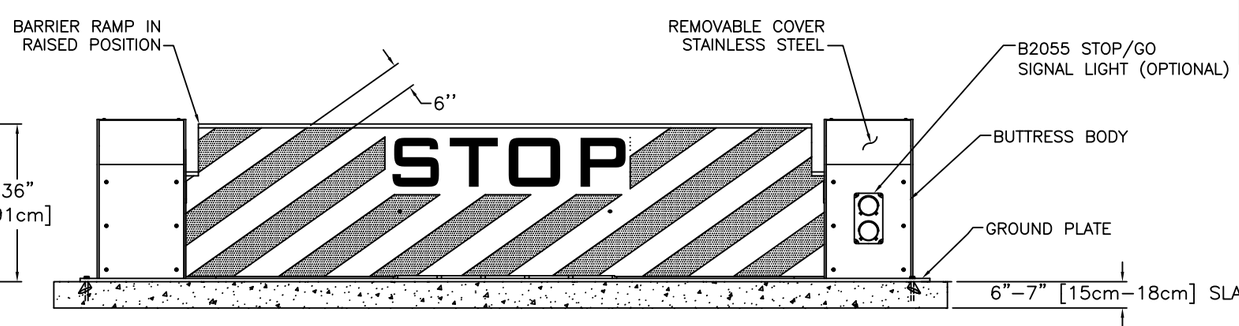

FRONT ELEVATION (UNPROTECTED SIDE)

DELTA SCIENTIFIC'S DSC1200
SURFACE MOUNTED SELF CONTAINED
CRASH RATED BARRIER

THE SYSTEM HAS BEEN TESTED IN FULL SCALE CONFIGURATION AT AN INDEPENDENT TESTING LABORATORY AND IS CRASH RATED TO K4, ZERO PENETRATION.

THIS BARRIER SYSTEM CAN BE SITED ON EXISTING CONCRETE OR ASPHALT ROADWAYS OR VERGES. NO EXCAVATION OR SUB–SURFACE PREPARATION IS REQUIRED.

THE DSC1200 IS A PHALANX TYPE SELF CONTAINED BARRIER WITH FREE PASSAGE BETWEEN BUTTRESSES OF 12 FT. (146IN.) OR SEE TABULATION.

POWER REQUIREMENTS:
SEE CONTROL CIRCUIT DRAWING 906XX.

NOTES:

1. OPTIONAL FEATURES INCLUDE

		PART NO.
A	HEATER, 'W' WATTS @ 120 VOLTS	B3050
A	HEATER, 'W' WATTS @ 240 VOLTS	B3051
B	LIMIT SWITCH, FULLY DOWN	B2010
C	LIMIT SWITCH, FULLY UP	B2011
D	BUTTRESS MOUNTED STOP/GO SIGNAL LIGHT	B2055

2. COLOR OPTIONS:
   WHITE W/6" WIDE YELLOW STRIPES
   BLACK W/6" WIDE YELLOW STRIPES
   WHITE W/6" WIDE RED STRIPES
3. ALL STEEL MEMBERS PER AISC STANDARDS WELDING DESIGN CRITERIA AWS D1.1, LATEST REVISION.
4. ALL MILD STEEL COMPONENTS SANDBLASTED TO NEAR WHITE METAL AFTER FABRICATION AND PRIOR TO COATING.

REV.	DESCRIPTION	DRWN BY	DATE	APPVD BY	DATE
M	SEE ECO 2015–080	M.R.C	09/09/15	JNF	9/23/15
L	SEE ECO 2015–009	M.J.S.	2/11/15		
K	SEE ECO 2012–049	M.C.	09/26/12	J.A.S.	09/26/12
J	SEE ECO 2012–002	M.C.	1/17/12	J.P.H	1/18/12
H	SEE ECO 2011–108	M.C.	9/16/11	D.M.	9/16/11
G	SEE ECO 2010–136	JTB	9/13/10		
F	SEE ECO 2010–021	J.M.	2/19/10		

REV.	DESCRIPTION	DRWN BY	DATE	APPVD BY	DATE
E	SEE ECO 2009–045	SWB	03/20/09		
D	SEE ECO 2008–161		12/15/08		
C	SEE ECO 2008–160	SWB	08/01/08		
B	SEE ECO 2008–065	JFW	6/10/08		
A	SEE ECO 2008–009	DCM	02/06/08		

THIS DRAWING UNLESS OTHERWISE NOTED, REMAINS THE CONFIDENTIAL PROPERTY AND TRADE SECRET OF DELTA SCIENTIFIC CORPORATION. IT SHALL NOT BE DISCLOSED, REPRODUCED OR USED FOR MANUFACTURE, DESIGN OR CONSTRUCTION WITHOUT THE EXPRESS AUTHORIZATION OF DELTA SCIENTIFIC CORPORATION. THE RECIPIENT BY ACCEPTING THIS DRAWING, ASSUMES CUSTODY THEREOF AND UNDER THE ABOVE TERMS AGREES NOT TO ALLOW USE OF BY UNAUTHORIZED PERSONS.

© 2008
ALL RIGHTS RESERVED

UNLESS OTHERWISE NOTED DIMENSIONS ARE IN INCHES

TOLERANCES
.X = ±.060/FT
.XX = ±.030/FT
.XXX = ±.010/FT
ANGLES = ±.5°

SURFACE FINISH
125 √

REMOVE ALL BURRS & BREAK SHARP EDGES .02 MAX

DELTA SCIENTIFIC CORPORATION
40355 DELTA LANE
PALMDALE, CA 93551 U.S.A.
(661) 575–1100 FAX (661) 575–1109

MODEL DSC1200 SURFACE MOUNT 36"
SELF CONTAINED BARRIER

DRWN BY	DATE	DRAWING NO.	REV.
J. MANOR	9/18/07	90270	M
CHKD BY	DATE		
APPVD BY	DATE	SCALE: 1:16 (D SIZE)	SHEET 1 OF 2