NOTES:

1. OPTIONAL FEATURES (PARTIAL)

		PART NO.
(A)	HEATER, 300 WATTS @ 120 VOLTS	B1283
(A)	HEATER, 300 WATTS @ 240 VOLTS	B1284
(B)	LIMIT SWITCH, FULLY DOWN	B2005
(C)	LIMIT SWITCH, FULLY UP	B2006
(D)	HOT–DIP GALVANIZING PRIOR TO PAINTING	

2. COLOR OPTIONS:

   SCHEME 90130–20: WHITE W/4" WIDE YELLOW STRIPES
   SCHEME 90130–25: BLACK W/4" WIDE YELLOW STRIPES
   SCHEME 90130–30: WHITE W/4" WIDE RED STRIPES

   FOUNDATION – ASBESTOS FREE ASPHALT EMULSION UNDERCOAT.

3. ALL STEEL MEMBERS PER AISC STANDARDS
   WELDING DESIGN CRITERIA AWS D1.1, LATEST REVISION.

4. ALL VISIBLE TOP STEEL COMPONENTS SANDBLASTED TO NEAR WHITE METAL AFTER FABRICATION AND PRIOR TO COATING.

5. REFER TO DRAWING 91130 FOR FOUNDATION SPECIFICATION

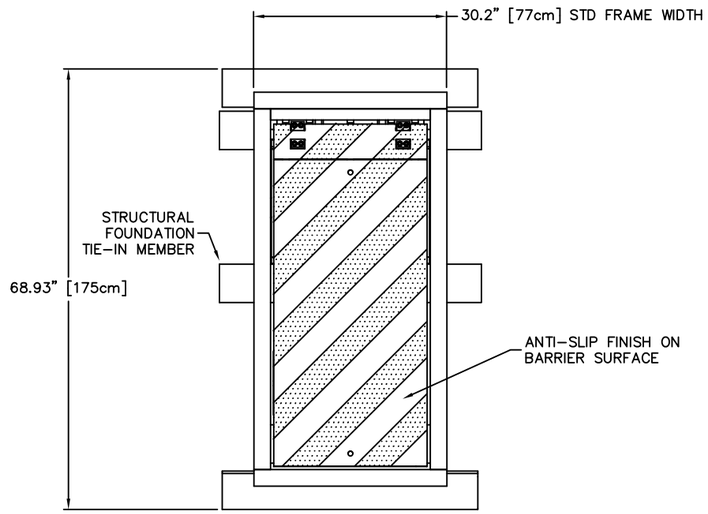

PLAN VIEW – DOWN POSITION

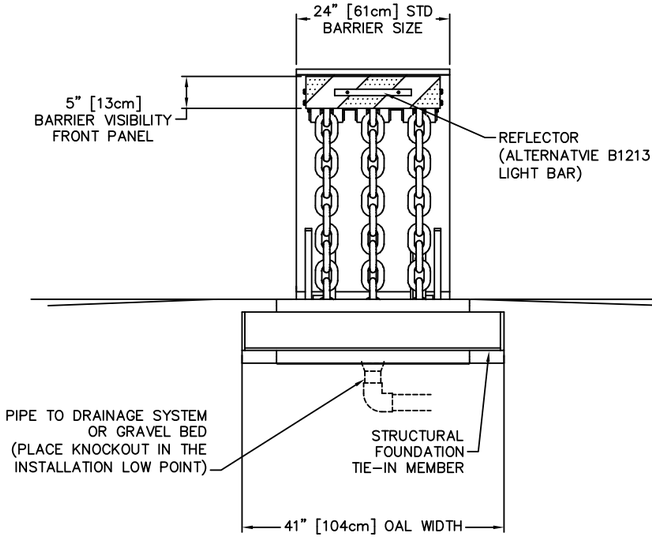

FRONT ELEVATION – UP POSITION

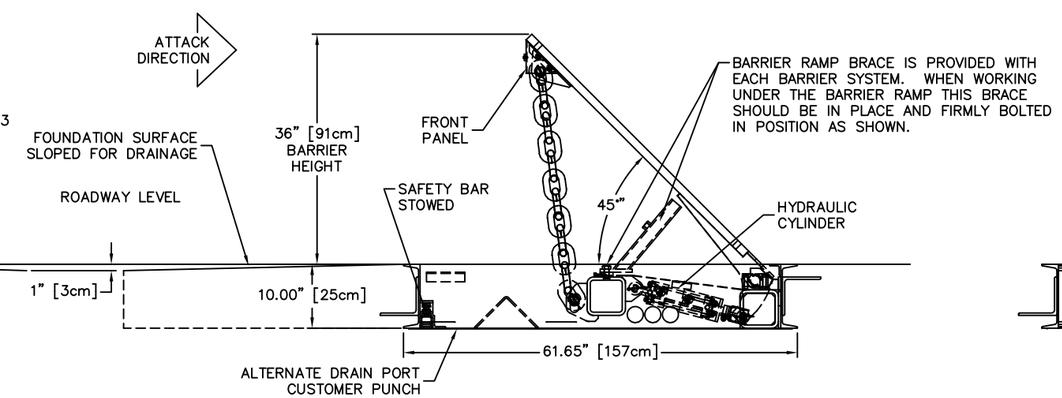

SIDE ELEVATION – UP POSITION

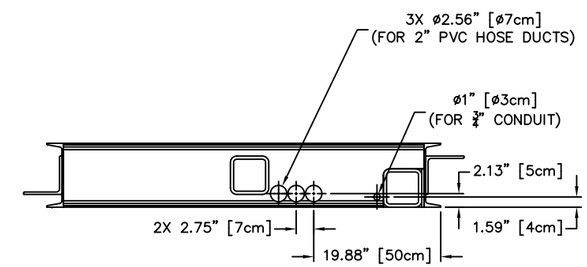

HOSE DUCT AND CONDUIT CONNECTIONS BOTH SIDES

REV.	DESCRIPTION	DRWN BY	DATE	APPVD BY	DATE
F	ECO #2010–156	JNF	10/02/10		
E	ECO #2009–224	DCM	12/11/09		
D	ECO #2009–028	DCM	02/27/09		
C	ECO #2008–122	JNF	10/13/08		
B	ECO #2008–081	DCM	07/23/08		
A	ECO #2006–131	JNF	10/11/06		

THIS DRAWING UNLESS OTHERWISE NOTED, REMAINS THE CONFIDENTIAL PROPERTY AND TRADE SECRET OF DELTA SCIENTIFIC CORPORATION. IT SHALL NOT BE DISCLOSED, REPRODUCED OR USED FOR MANUFACTURE, DESIGN OR CONSTRUCTION WITHOUT THE EXPRESS AUTHORIZATION OF DELTA SCIENTIFIC CORPORATION. THE RECIPIENT BY ACCEPTING THIS DRAWING, ASSUMES CUSTODY THEREOF AND UNDER THE ABOVE TERMS AGREES NOT TO ALLOW USE OF BY UNAUTHORIZED PERSONS.

© 2006 ALL RIGHTS RESERVED

UNLESS OTHERWISE NOTED DIMENSIONS ARE IN INCHES

TOLERANCES
.X = ±.060/FT
.XX = ±.030/FT
.XXX = ±.010/FT
ANGLES = ±.5°

SURFACE FINISH 125

REMOVE ALL BURRS & BREAK SHARP EDGES .02 MAX

DELTA SCIENTIFIC CORPORATION
40355 DELTA LANE
PALMDALE, CA 93551 U.S.A.
(661) 575–1100 FAX (661) 575–1109

DSC2000 PHALANX BARRIER
GENERAL ARRANGEMENT

DRWN BY	DATE	DRAWING NO.	REV.
J. FRIEND	7/25/05	90130	F
CHKD BY	DATE		
APPVD BY	DATE	SCALE: 1:12 (D SIZE)	SHEET 1 OF 2

PHALANX™